REEL VM 450/127-316

07 General reels, 09 VM - reels

Reusable
Winding material : data cable, power cables, Extruded cables
Material : ABS
Standard winding volume : 37407 cm³
Central bore Ø : 127 mm
Catalogue categorization: 07 , 09
DIN 46395

TECHNICAL DATA - SPOOLS

Spools

Flange Ø	Barrel Ø	Central bore Ø	Width	Winding width	Flange thickness	Winding-volume	Central bore Ø tapered part	Drive-hole/pin	Drive-distance
d1 [mm]	d2 [mm]	d3 [mm]	L1 [mm]	L2 [mm]	S [mm]	V [cm³]	d4 [mm]	d5 [mm]	E1 [mm]
450	180	16 - 127	316	50 - 280	18	6680 - 37407	143.5		

PACKAGING

Designation	Cardboard box	Cardboard box weight	Cardboard box Outside Deminsions	Pallets	Pallet weight	Pallet's external dimensions

Designation	Cardboard box	Cardboard box weight	Cardboard box Outside Deminsions	Pallets	Pallet weight	Pallet's external dimensions
	piece	kg	cm	piece	kg	cm
Reel VM 450/127-316	0	-		36	195	80x120x208

Important:
If pallet packaging is indicated, this is the preferred method of packing the spools. Please note that the pallets must not be stored in direct sunlight, as the heat build-up may cause the plastic to warp permanently.

TECHNICAL DRAWING
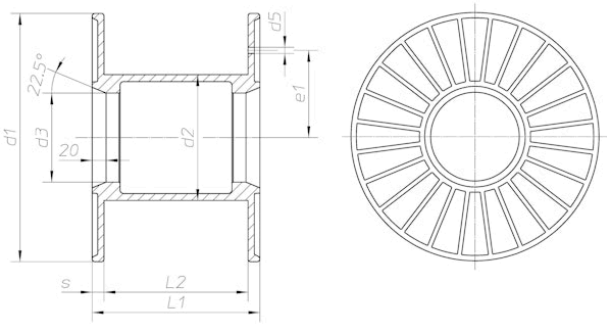
Spools